**One-of-a-kind pattern competition model for REFLEX XTR²**

# Simla

## Designed, built, and flown 1965 by Ed Kazmirski

Hardly known and shrouded in legend, Simla was probably the last design of world-famous Ed Kazmirski. It did not bring him good luck. It was damaged even before seeing contest, repaired increasing its weight, used for only one season (at least successfully), stowed away, and finally disappeared after a move to another house. So it does not exist anymore, unlike Ed's other planes, and there are no plans, either, since not any were drawn.

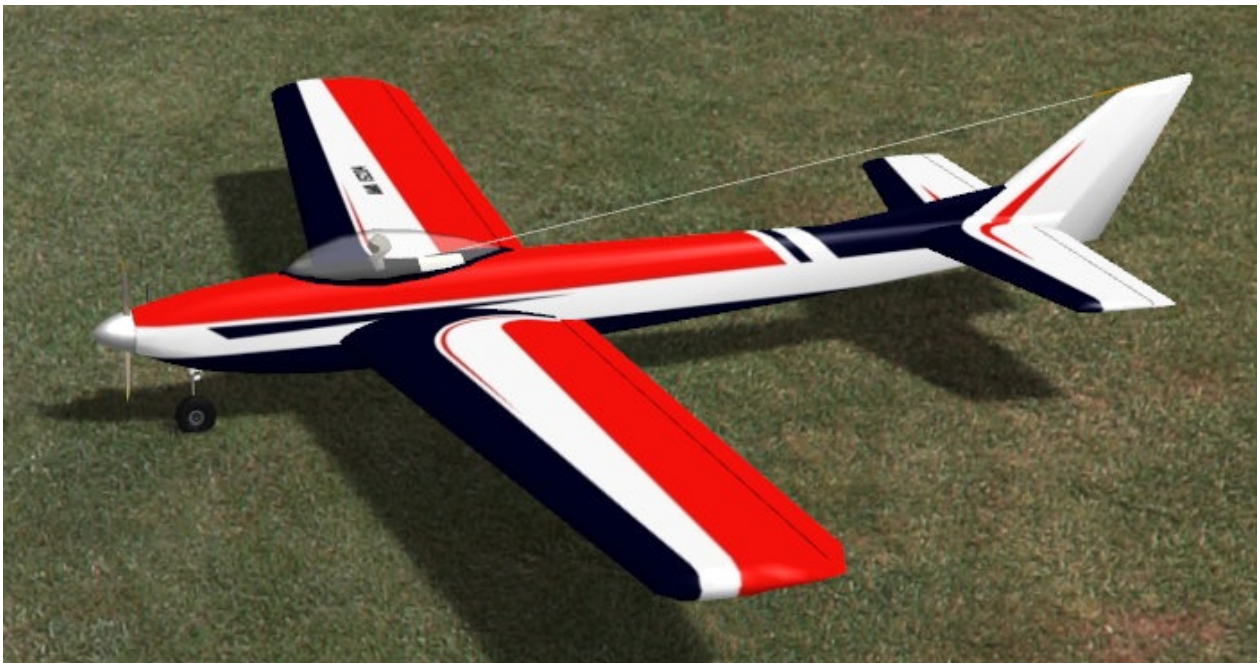

After Ed passed away in 2008, his Taurus models were put on auction and that sparked a long-winded thread in the RC Universe Classic Pattern forum. A few fellow modelers from all over the world tried to reconstruct the history of Ed's models, especially the Taurus. For Ed, Simla was just a 1.5 scaled, big Taurus so it had to be reconstructed as well, and that was of great interest and rather challenging.

Beginning at page 50 of the RC Universe thread, a small "gang" of about five modelers managed to reconstruct Simla to a degree that it could be built again. I'm UStik in the thread and "built" several possible Simla variants for the REFLEX XTR² model flight simulator to check them out before deciding on a variant to be built in reality. The picture above shows what probably Ed K. finally settled on, and below you'll find information about all variants.

## The REFLEX Models

There are 22 different Simla models in REFLEX, meaning 22 parameter sets with different settings for wing planform, aileron width, weight, and drive. For better orientation, the "models" are named following a simple system:

They are grouped into 5 versions, V1 to V5. After a dash ("-") follow wing-span (inches), aileron width (inches), dihedral (degrees), and in some cases the type of wing clipping. After another dash follows the weight (pounds), and after a third dash motor and propeller. One of the variants has retractable landing gear, designated by "- retracts".

We assumed that Ed built Simla with 102 in wingspan and narrow (1.25 in) ailerons in the first place. Weight (including fuel) could have been 10.4 lbs after some damage and repair. The original weight, before that, could have been merely 8.9 lbs. The wings were adjustable in a plug-in mount, so incidence angle and dihedral could be changed easily.

Ed tried 6 degrees dihedral, then 2, and settled on 4 degrees. So I set up the original version (V1) with these three dihedral angles:
V1 - 102 1.25 **2** - 10.4 lb - .61 11x7
V1 - 102 1.25 **4** - 10.4 lb - .61 11x7
V1 - 102 1.25 **6** - 10.4 lb - .61 11x7

After finding the Orbit proportional servos strong enough, Ed enlarged the ailerons to 1.75 inches width, giving the second version (V2). He used a Super Tigre ST 60 R/C engine, maybe later a Veco RC 61, and probably a Merco 61 R/C with wooden 11x7 or 11x8 in propellers. The Merco version has been set up (realistically) with less power and less weight as well.
V2 - 102 1.75 4 - 10.4 lb - .61 11x**7**
V2 - 102 1.75 4 - 10.4 lb - .61 11x**8**
V2 - 102 1.75 4 - **8.4 lb** - .61 11x8 **Merco**

Since "the gang" intended to build real Simla models of that version, some modern drives were studied. An electric motor should give at least as much thrust as an old .60 two-stroke, so the prop may have a pitch for slightly slower flight speed. The same is true for a modern four-stroke engine. It was doubted that a .91 would suffice so a 1.30 was tried as well. Eventually, a modern .61 two-stroke was tried. For a modern Simla incarnation, only 2 degrees dihedral was arbitrarily chosen.
V2 - 102 1.75 2 - 10.4 lb - **AXI4120 12x8**
V2 - 102 1.75 2 - 10.4 lb - **RCV91 14x6**
V2 - 102 1.75 2 - 10.4 lb - **RCV130 16x6**
V2 - 102 1.75 2 - 10.4 lb - **OS61FX 11x8**

For those who find these drives still too weak, the model's weight was assumed to be only 8.9 lbs or even less. That seemed to be possible with particular attention to lightweight build and could possibly make the model competitive (for instance in SPA contests) even with the smaller drives.

V2 - 102 1.75 2 - **8.9 lb** - AXI4120 12x8
V2 - 102 1.75 2 - **8.9 lb** - RCV91 14x6
V2 - 102 1.75 2 - **8.4 lb** - OS61FX 11x8

Obviously, Ed Kazmirski eventually clipped Simla's wings to only 95 in wingspan. One way he could have done this is chopping the wing roots. That would explain some wing area data given in an article but was not accepted by most of "the gang", the more as it would be consistent only assuming the narrow ailerons, which were not liked by Ed. So this third version (V3) was compared to a fourth version (V4) with some kind of tip clipping. Both versions have the original dihedral and drive but are just fictitious.
V3 - 95 1.25 4 **root** - 10.4 lb - .61 11x8
V4 - 95 1.75 4 **tip** - 10.4 lb - .61 11x8

The real final Simla version (V5) was obviously the smaller wingspan version gotten by an even simpler kind of tip clipping, keeping the wider ailerons and 4 degrees dihedral. This should be closest to Ed Kazmirski's original model:
V5 - 95 1.75 4 tip - 10.4 lb - .61 11x8

It was again set up for three of the modern drives and with only 2 degrees dihedral. For the electric motor and the .91 four-stroke, it seemed reasonable to assume the lower 8.9 lbs weight because else the model really seemed a bit dull. A retractable landing gear looks good and was tried with the .91 four-stroke version. There's a trade-off between more weight and less drag so it's worth comparing. The 1.30 four-stroke version is set up for the higher weight since the engine is heavy but in exchange gives plenty of thrust.
V5 - 95 1.75 2 tip - 8.9 lb - AXI4120 12x8
V5 - 95 1.75 2 tip - 8.9 lb - RCV91 14x6
V5 - 95 1.75 2 tip - 10.4 lb - RCV91 14x6 – retracts
V5 - 95 1.75 2 tip - 10.4 lb - RCV130 16x6

The power of all drives is calculated from manufacturer specifications. They may be a bit, but not too optimistic. The electric drive's figures are even quite accurate. For the .61 two-stroke glow engine, though, a rather high power (1.3 hp) was assumed. It may be the power Ed Kazmirski expected to have in the next years after 1965 and that he might have had already from the Veco 61 or even the Super Tigre, which were known to be powerful engines without muffler. At least that power was available in the early 1970s despite using mufflers, when the Schnürle-ported engines were brought out, for instance the O.S. 60F-SR, even if they weighed 6 oz more.

Finally and for completeness, Ed Kazmirski's last Simla version has been set up with the well-known performance data of the Merco 61 R/C engine, which was known as a "stump puller". At least with the lower weight it seems to be competitive in terms of the mid-1960s pattern schedules.
V5 - 95 1.75 4 tip - 10.4 lb - .61 11x8 Merco
V5 - 95 1.75 4 tip - 8.9 lb - .61 11x8 Merco

Of course, the model variants with big propellers have a taller landing gear, but they don't need bigger wheels for use on grass runways. The respective drives are even shown in the visible simulator model, together with the taller and a bit more aft nose landing gear.

## Demonstration Flight

Just to give an impression of Simla's basic flight characteristics, I recorded an unskillful yet informative demo flight. To view it, hit F9 in REFLEX and under “Aircraft” select “Simla in Muncie” (at the AMA Flying Site #3).
You may as well view a video of this demo flight at YouTube (in low quality with comments and in HD without).

## Suitable Sceneries

Actually, the Simla models don't need special airfields/sceneries, but those with a paved runway or at least smooth grass runway are better suited than others with coarse runways. Among the stock REFLEX sceneries, especially the “AMA (Muncie)” scenery (found in the scenery selection under “United States”) is pertinent.

There are nice sceneries, made by independent authors and available for download, that are nearly as good as the stock sceneries. While installing the Simla models (link to my download page at the end of this document) you may have some of them downloaded and installed as well:

Especially suited to this model with short landing gear and small wheels is “MFG Klagenfurt – St. Johann im Rosental” in Austria with a long tarmac runway (148 m / 485 ft). “MFG Uetze e.V.” in Germany has a concrete-block pavement with smooth grass around. “VTFE” in Germany, “MFC Silbergrube” in Austria, as well as “MSG Virngrund e.V. Neuler” in Germany have smooth grass runways.

Please remember that you can modify several environmental settings. Hit F6 for the "Simulation parameters" dialog box and in the "General" tab select an "Aircraft initial position". In the "Wind and Thermals" tab, set "Wind force" to 1.5 or 3 Beaufort or even zero. You may change the “Wind direction” as well.

Consider setting the “Camera zoom factor” to zero, “Camera predictive” to 25%, and the “Camera aperture angle” to 90 degrees in the “Camera” tab. You might like that for a more realistic impression and for better orientation in the simulator, or you may just experiment to find settings that suit you.

After modifying any value, use the down or up key to go to another data field and only then hit or click "OK"! Otherwise the change would not be accepted. To restore any default value, just hit the Alt-0 (zero) keys together when the data field is selected.

## The Magazine Pictures

At first, only pictures from magazines were available. Even though they show the outlines and the general character of Simla quite well, they are still not practical to reconstruct Simla's geometry. They only give some hints for that and show some details useful for checking assumptions.


Advertisement in the June 1965 issue of Model Airplane News (MAN)


1965 US National Championship (source unknown)

The following full-page ad contains several specifications, which, properly taken, make for reasonably safe assumptions about the original model.

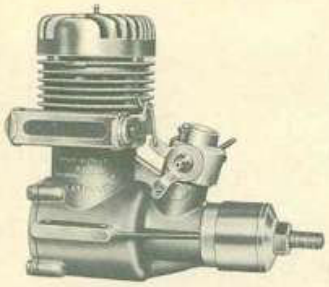

**MODEL** — SIMLA 8½ ft. span; 11 lbs. By National and International Champion Ed Kazmirski
**CONTROL** — Orbit Quadruple Proportional **ENGINE** — Super Tigre 60 R/C

**CONTROL SYSTEM — Orbit Proportional** — Ed is using the full house Orbit system. We think this is one of the very first Orbit Quadruple Proportionals that Orbit's Bob Dunham shipped. The original 1¼" ailerons on the SIMLA were too narrow. When Ed increased the 4' long ailerons to a 1¾" width he was a bit afraid he would have servo power problems. Rolling dive tests prove the Orbit servos have plenty of power for this high torque job. Ed likes the centering on his Orbit servos. Each Orbit Proportional R/C System is 100% tested and inspected and ready for installation. Orbit Quadruple Proportional $595.00 from Orbit.

**SIMLA** — Named for a town in the Himalaya Mountains. 8½ ft. span; 11 lbs. with fuel; 9¾ lbs. empty, incorporates a special nose wheel for a nose high take-off. Originally had 6 degrees dihedral, then 2, and now Ed has settled on 4 degrees. Ailerons are 1¾" wide, Bosch airfoil wings plug into the fuselage. Wings are retained by a keeper that locks the ¾" dia. plug to the socket in the fuselage. This should become a very popular mount as it permits mid-wing design and still leaves room for R/C components. Incidence is easily varied. Stab spans about 34". SIMLA flies through all AMA maneuvers and does the tail slide particularly well.

**ENGINE — Super Tigre 60 R/C** — Ed advises that he is very well pleased at the ability of the Super Tigre 60 R/C to pull this large model through the AMA pattern. One spectator (a competitive engine salesman, no less) was so enthusiastic about the ST 60 R/C, performance and power, that J. Maloney and Harry Harps from World Engines went up to Chicago and got the story and the photos from Ed for this ad. Note: Ed increased the venturi slightly to .300" and the air bleed to .090". The Super Tigre is a twin ball bearing engine; chromed sleeve is standard; (2) cast iron rings running in a cast aluminum piston. $38.50 from World Engines, Inc.

Orbit Electronics
11601 ANABEL AVENUE,
GARDEN GROVE, CALIFORNIA

WORLD ENGINES INCORPORATED
8206 BLUE ASH ROAD CINCINNATI, OHIO 45236

Advertisement in the August 1965 issue of R/C Modeler (RCM)

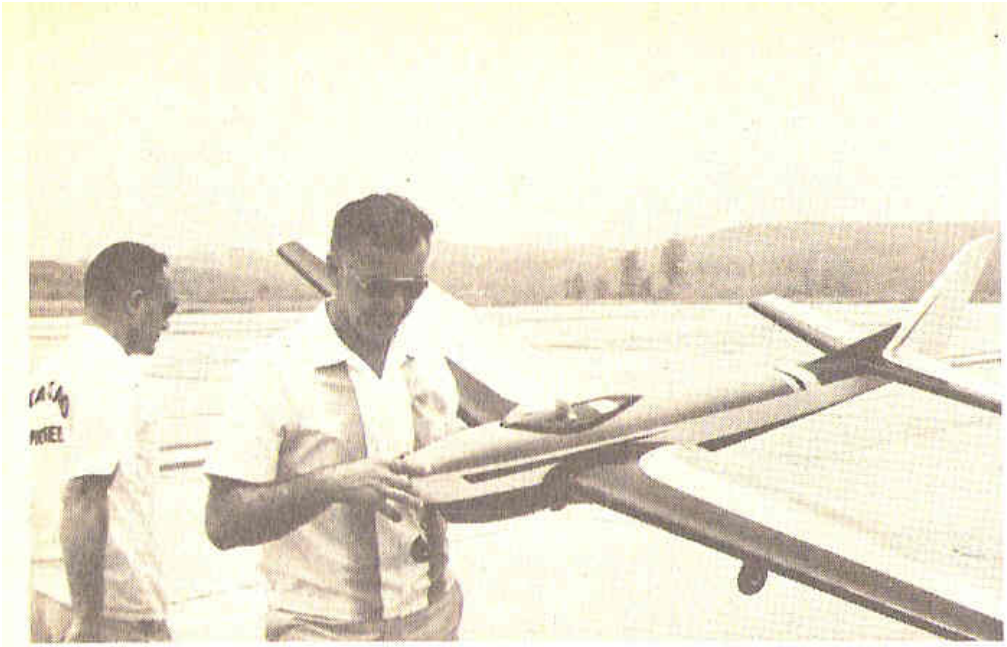

Ed Kazmirski has handful with his new shoulder wing multi bird. Les Fruh his pit man, is the F&N man who supplies all those rc fittings.

(source unknown)

Ed Kazmirski with another of the "Big 'Un's".

(source unknown)

The last one is the following article from American Modeler (supposedly) where Curt Dimberg's model, which is actually a Simla, is said to weigh 8 lb 14 oz while Ed's model weighs 9 lb 12 oz. That has to be after the damage and repair, and the wing looks like the later clipped version. This information was used to assume the actual weight and a possible lower weight.

AERO MODELLER

540

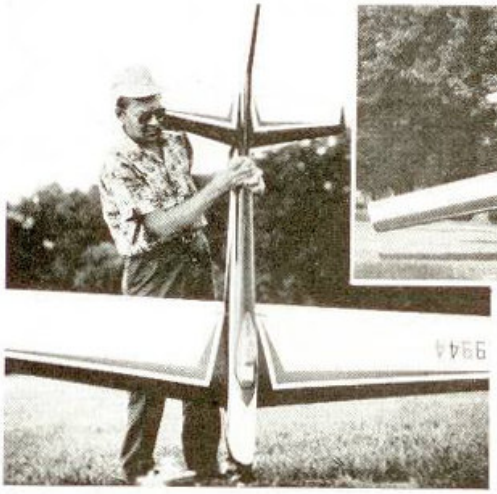

Report by
DICK STOUFFER

Curt Dimburg, far left, has 100 in. wing, 16 in. chord at root. Model weighs 8 lb. 14 oz. Ed. Kazmirski (right) has 95 in. wing for 9 lb. 12 oz. Both use Super Tigre 60 and Orbit proportional r/c.

# BIG STUFF

## NEW U.S. TREND TOWARDS LARGER RADIO CONTROL MODELS & ENGINES

CURT DIMBERG of Palatine, Illinois, first conceived the idea of a large type model about 3½ years ago. At that time he used 7 ft. span with N.A.S.A. 2415 aerofoil. His present model uses a primary design by Ed. Kazmirski with "Taurus" approach to configuration.

A general impression of the flight of this model is of good stability while approaches to landing are smooth and in no way jerky, with smooth landing and roll out. The model moves at good speed through the air and certainly would have good penetrating qualities on windy days. Such large models get into better Reynolds number ranges due to size, and the larger, low wing configuration gives a better ground effect with reduced drag and lower landing speed as a consequence at the point of flare-out for a landing, resulting in a floating glide to touchdown.

Ed. Kazmirski's model is known as "Simla", not because it looks like Curt's but was named after a village in India. Ed. believes that the high drag, high power, light wing loading approach produces better performance in contest models. Drag varies with speed tending to maintain a uniform speed range for all manoeuvres in the pattern. This explains the thick wings and blunt leading edges on many of Ed's models. Another consideration in favour of the larger model was that due to its physical size it is easier to see slight trim changes much more readily than in the "smaller" 6 ft. models. This tends to make smoother flight easier to accomplish.

Ed. is quite enthusiastic over prospects for this type of model. The two piece wing makes it much easier to transport and can be placed in shoulder, mid or low configuration by changing the mounting blocks in the fuselage. Dihedral can be varied, and wing incidence is readily changed by means of a small jack screw located near the rear spar location. Structurally this wing mounting system is quite strong.

With model engine power available "Simla" is sensitive to engine performance. A loss of 800 r.p.m. made a difference between 1st and 2nd place at a recent contest. "Simla" and Ed. have achieved two firsts. One at Detroit and the other at South Bend. Two 2nds have been taken at Desmoines and Dayton.

The two piece wing is very interesting and details can be seen in the photos. Since the wing can be removed, the trim established in the ailerons must be the same each time the wing is installed. This is accomplished by using square tubing on the aileron that slips into square tubing on the aileron servo. The main weight of the wing is supported in the dihedral blocks at the centre of lift point on the profile of the chord. This is a split maple block bolted to a bulkhead and reinforced with a metal tube insert. Two long bolts are inserted on the split side of the block and tightened to grip a large dowel or tube that is mounted in the wing root and also metal reinforced. Nieuports of WWI used similar mounting for the lower wings, in the 11 and 17 series.

"Simla" details. Left, wing root stub and aileron key about to fit fuselage. Centre, engine and nosewheel on front bulkhead. Exhaust has set-screw idle adjuster. Right, mounting block out of fuselage. Four holes locate on special former for dihedral. Rear tube sets incidence. Aileron pick-up between.

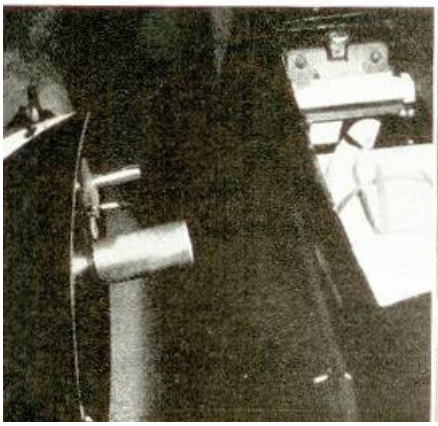

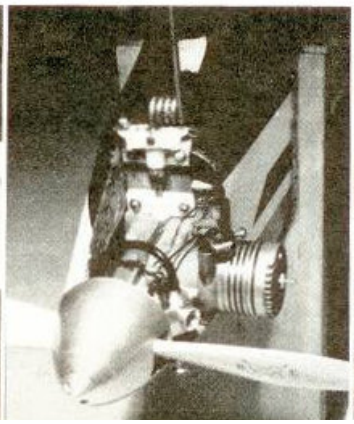

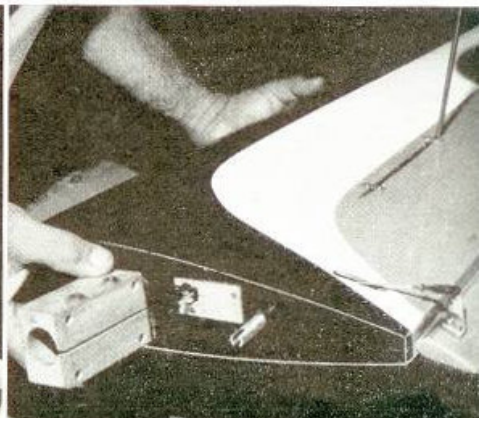

## Ed's Own Photos

After a while, Simla photos, made by Ed Kazmirski himself, emerged from a source we are much obliged to. It is Chuck Noble, the auctioneer of Ed's estate, who put Ed's Taurus models on auction.

I think they are contact prints of 6x6 monochrome film negatives. Presumably, Ed had a twin- or single-lens-reflex camera for the 6x6 cm (actually 56x56 mm) "medium format", also called "120" or "220" film. It could have been a Rolleiflex, or the amateur model Rolleicord, or even a Hasselblad, all with a viewer screen on top, hence the low point of view. The pictures are really sized about 56x56 mm and show about 40 degrees horizontal field-of-view, indicating a "normal" focal length, in this case a 75 or 80 mm lens.

Fortunately, one of the pictures is really suited to take measurements. I made it simple and just experimented to find the optical centerline. I used Panorama Tools and the hugin front-end to remove perspective distortion. In vertical direction (spans), the results are quite reliable because they could be checked by comparing both wings. The horizontal dimensions (length, chords) are not quite that reliable because there's no such simple criterion and I had not the time to apply better methods, but they are still good enough.

Dated May 1965, the pictures show Ed K. and an unknown helper. The photos have been shot at the Kickapoo Woods model flying field, quite close to Ed's home in Calumet City, south-east of Chicago.

The following five contact prints show the model in its original condition, maybe even before maiden flight. There's still no AMA number on the right wing, the wings have 102 in span and the ailerons are only 1.25 in wide. The left-middle one is the best picture mentioned above. It defined the model's planform including the vertical tail. The right-top picture was finally used to at least estimate the model's vertical dimensions.

MAY • 65 B

MAY • 65 B

MAY • 65 B

MAY • 65 B

MAY • 65 B

The quite reliable “span-wise” dimensions:

The less reliable “length-wise” dimensions:

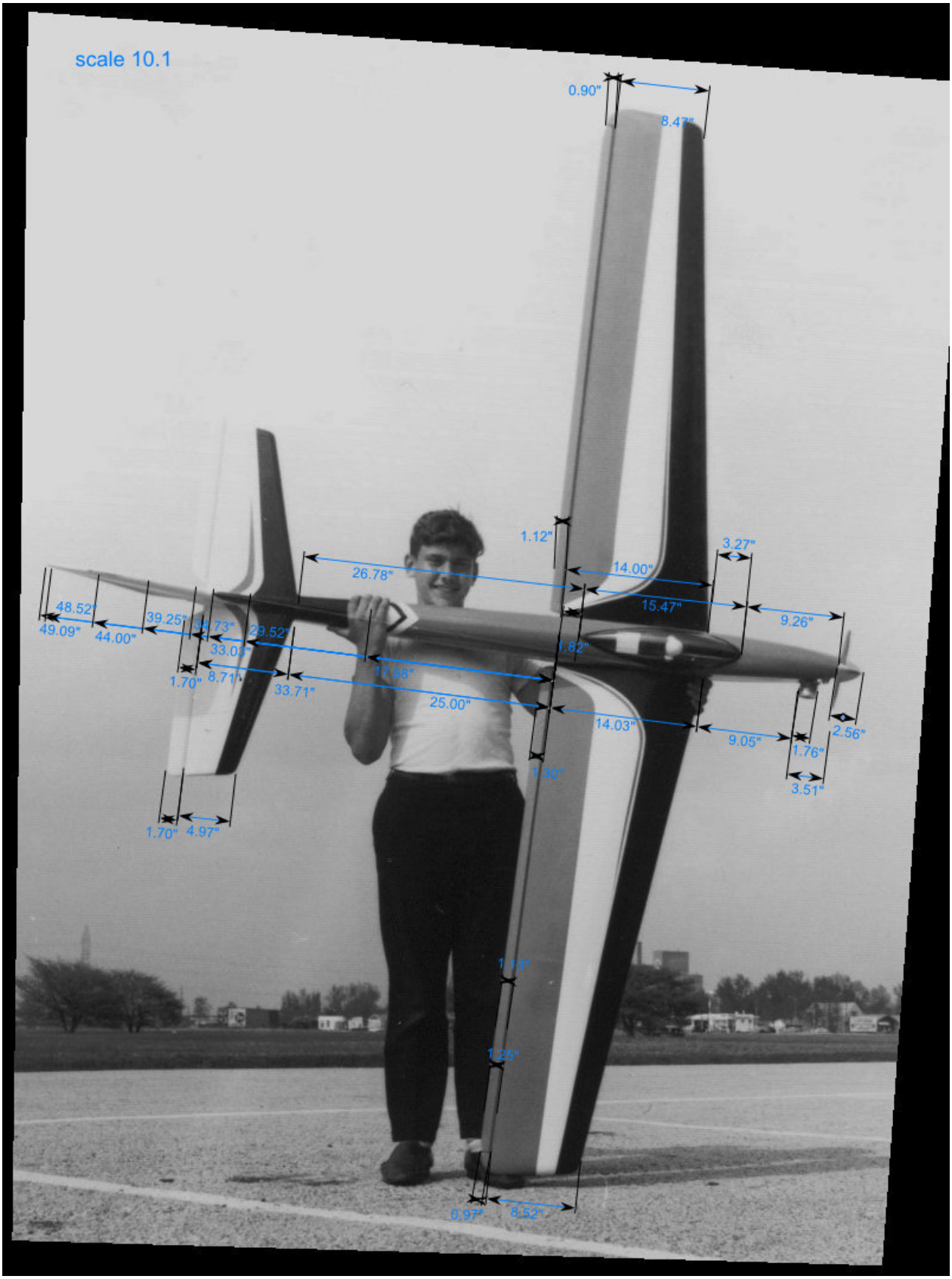

My (partly failed) attempt to evaluate the required vertical dimensions:

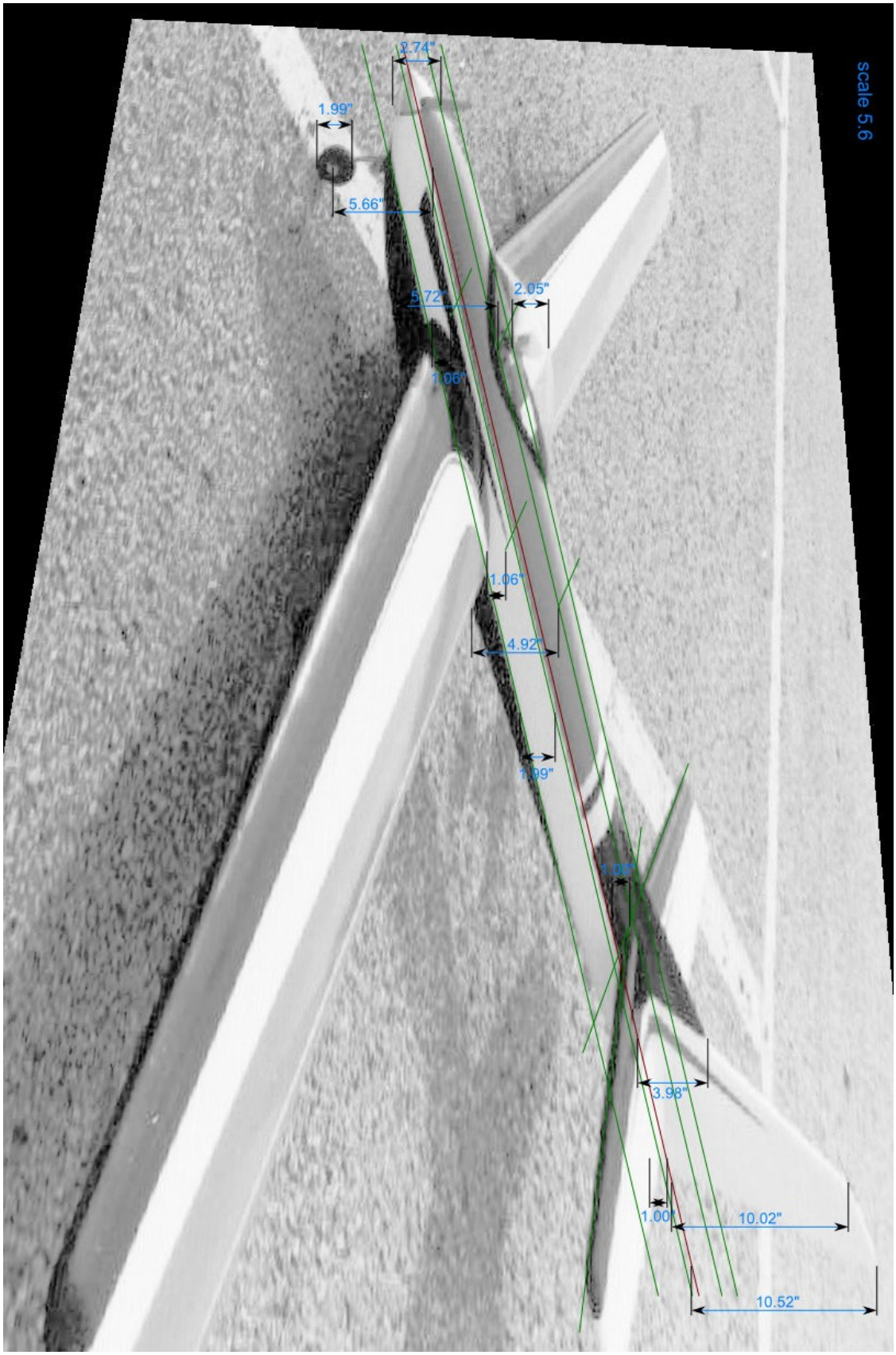

## Measuring Software

For architects and other trades, special measuring software exists. Besides doing what I did “by hand” (measure in undistorted photos), it can combine photos of a subject, shot from different points of view, into an all-embracing measurement.

I used a trial version of ELCOVISION 10 to declare the characteristic points common to the five Simla pictures. Actually, such a program needs special measuring photos with embedded Reseau crosses made with a measuring camera to have only marginally distorted pictures, undistorted by the software. Using the contact prints and only calibrating with the square frame outline (which is not even quite square but slightly distorted) is only a makeshift. The program managed to calculate a spatial model but quite unreliable.

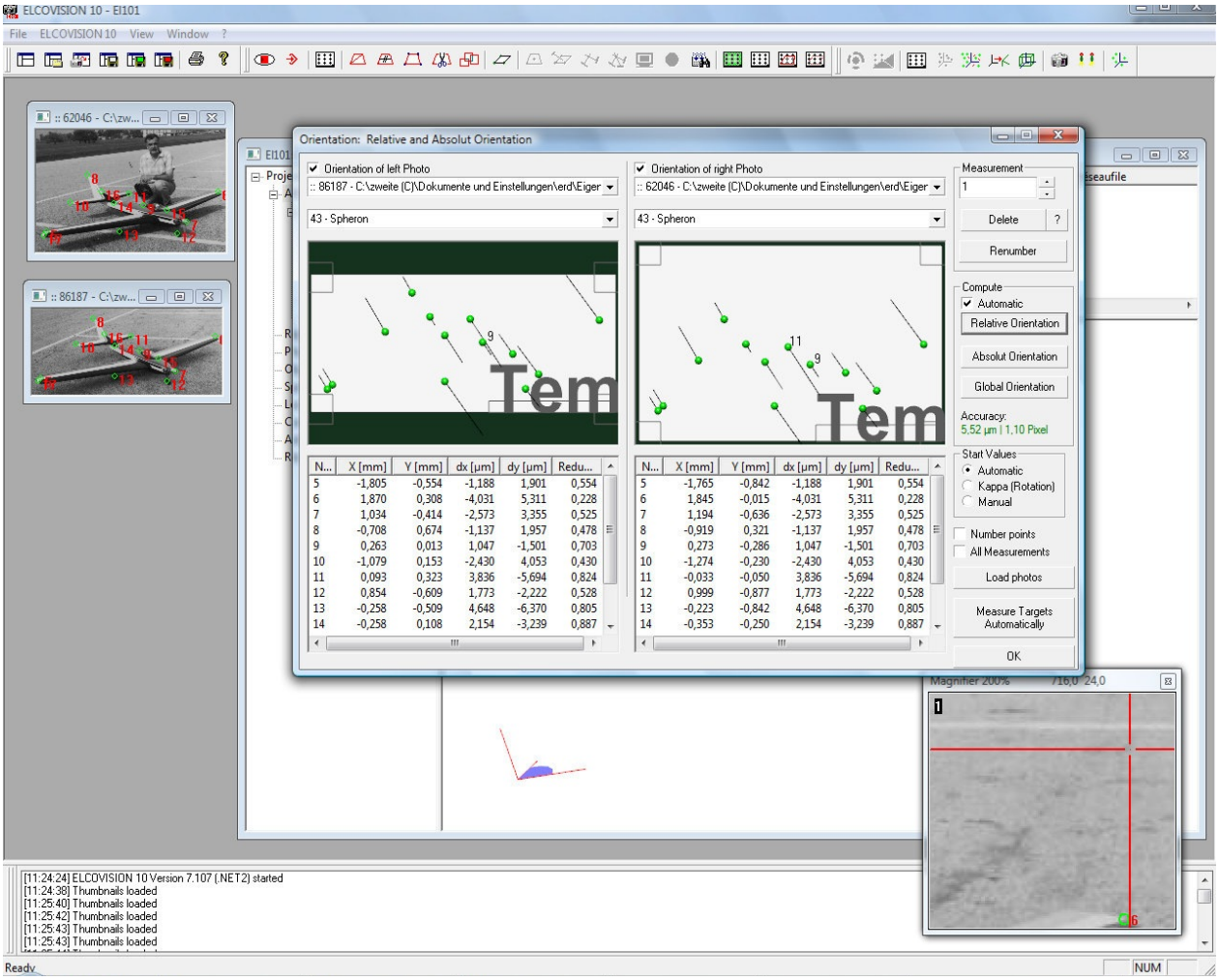


Accuracy was so bad that the only useful result was the verification of the landing gear spacing measured the simple way from one of the pictures. It would have been too tedious to get new high-resolution, high-contrast scans of the contact prints, calibrate the frame measurement, and define and fine-tune several common control points, so this path was given up.

## The Drawings

Finally, the measurements from the two photos were used to draw sketches that show all dimensions in context (same scale throughout). To make sense, the measured values were replaced by the nearest round numbers.

The fuselage with fin and rudder is the same in all versions. This side view shows the big 102 in span wing at 4 degrees dihedral, bringing the wing's center of drag in line with the thrust line.

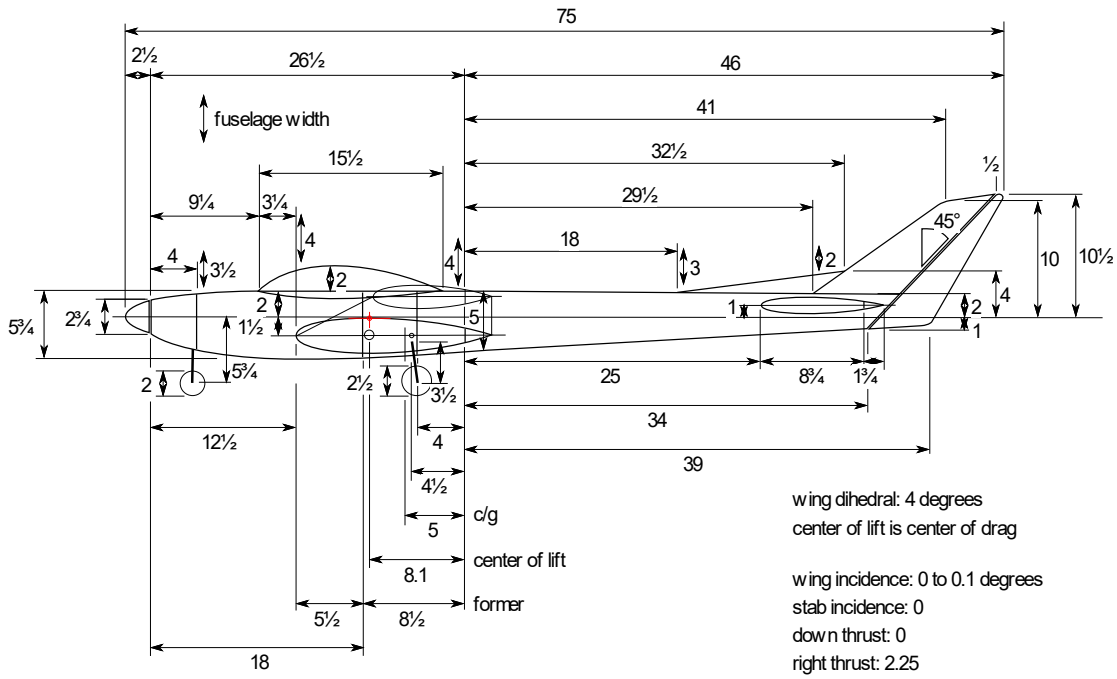


The horizontal stabilizer is quite simple and the same for all versions. NACA 0015 airfoil was only an assumption because the stabilizer looks rather thick in all pictures. It might be 12% thick or whatever as well.

dihedral: 0 degrees
incidence: 0 degrees

NACA 0015
thickness 15%

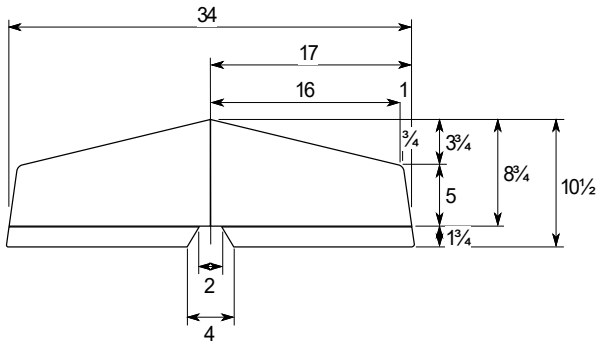

This should be the original wing planform. Nice round numbers for span and both root and tip chord, and nicely rounded wingtip as well. The ailerons are only 1.25 in wide not to overburden the single aileron servo. The ailerons are “protruding” a bit out of the trailing edge of the airfoil outline.

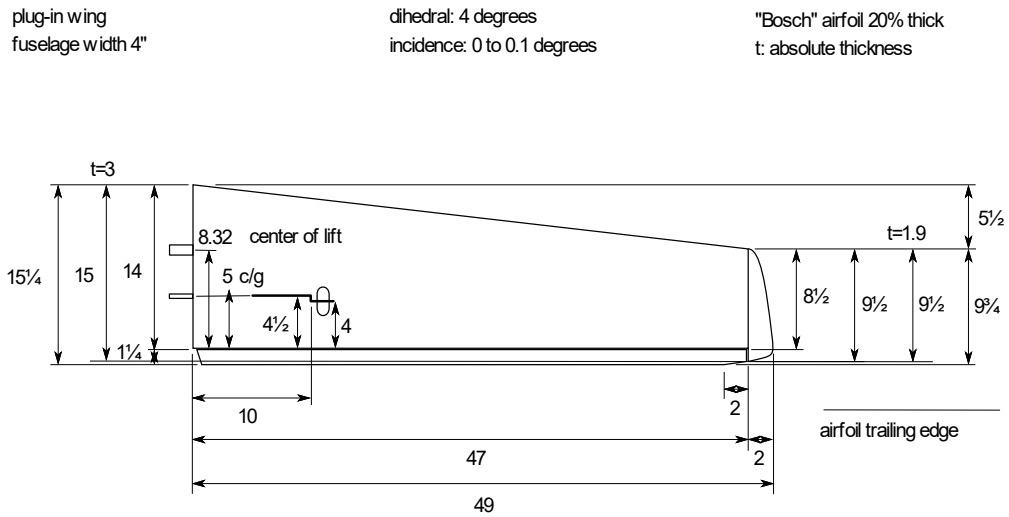


wing span 102, small ailerons

According to the advertisement (page 6 above), the servos turned out to be strong enough so the ailerons were widened to 1.75 in, now “protruding” a bit more what might have made them even more effective.

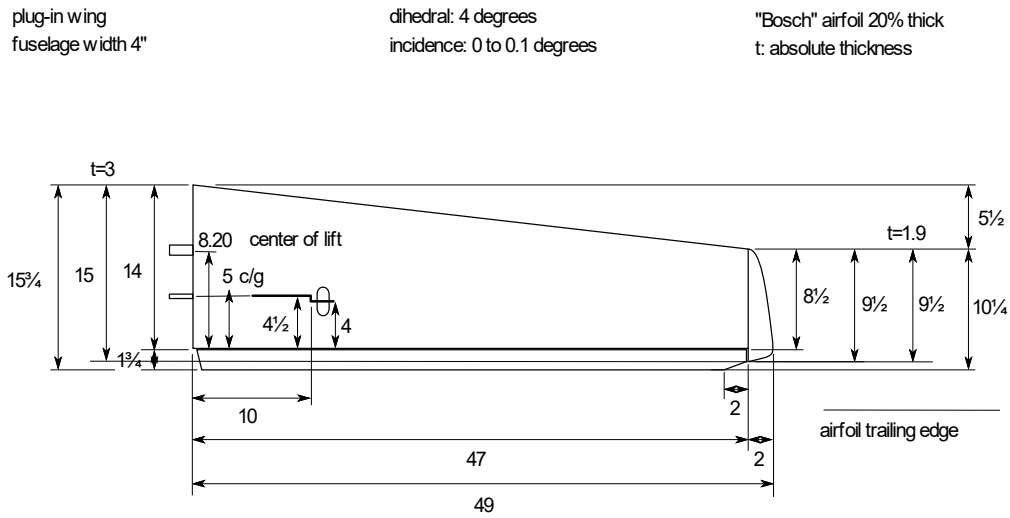


wing span 102, big ailerons

Ed Kazmirski clipped Simla's wings by 7 inches to 95 in wingspan, specified at least two times. According to some wing area data given in a magazine, the wing clipping could have been done by chopping the root. The figures might be consistent to some degree, but only with the narrow ailerons.

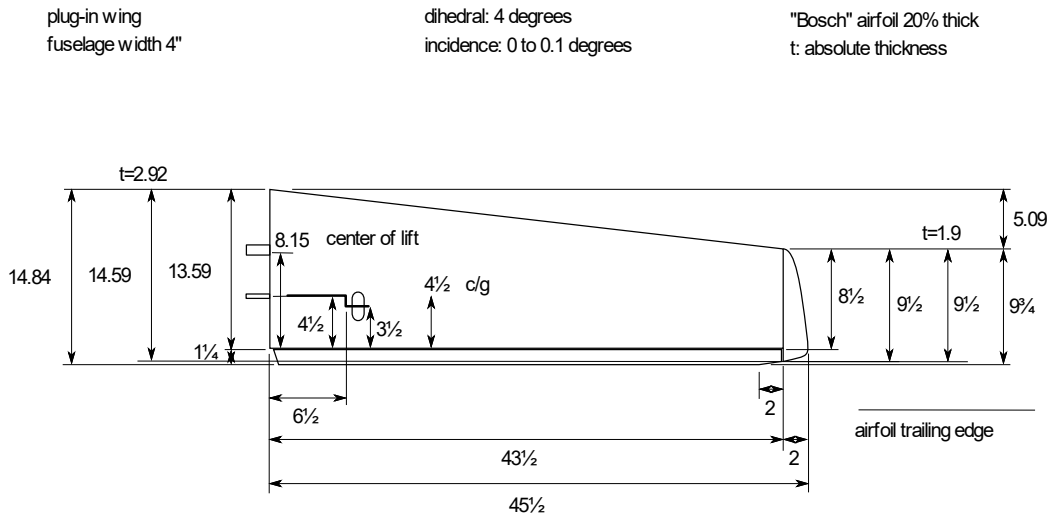


wing span 95, root clipped, small ailerons

That didn't really look consistent, though, so the idea was given up. Ignoring the wing area data from the magazine, simply clipping the tips and retaining the wider ailerons was assumed. The 2 in wide rounded wingtips were kept, but that seems to be not right since chopping one 3 in rib bay (assumption) at each side would give 96 in wingspan, other than the 95 in specified.

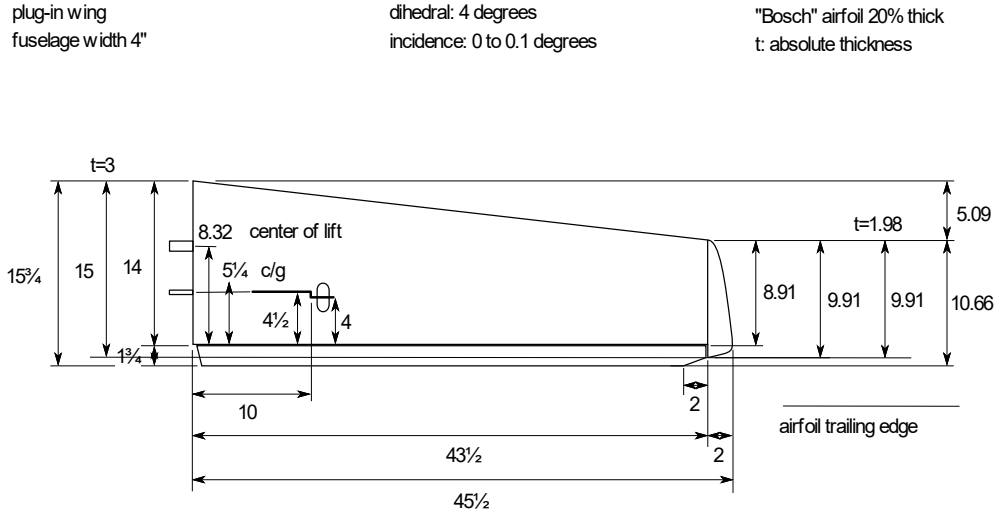


wing span 95, tip clipped, big ailerons

So finally we assumed that one 3 in rib bay was chopped at each side and a new, ½ in narrower rounded wingtip was made. Together with the aileron bevel, it gives a quite good-looking wing planform, at least resembling that shown in some pictures.

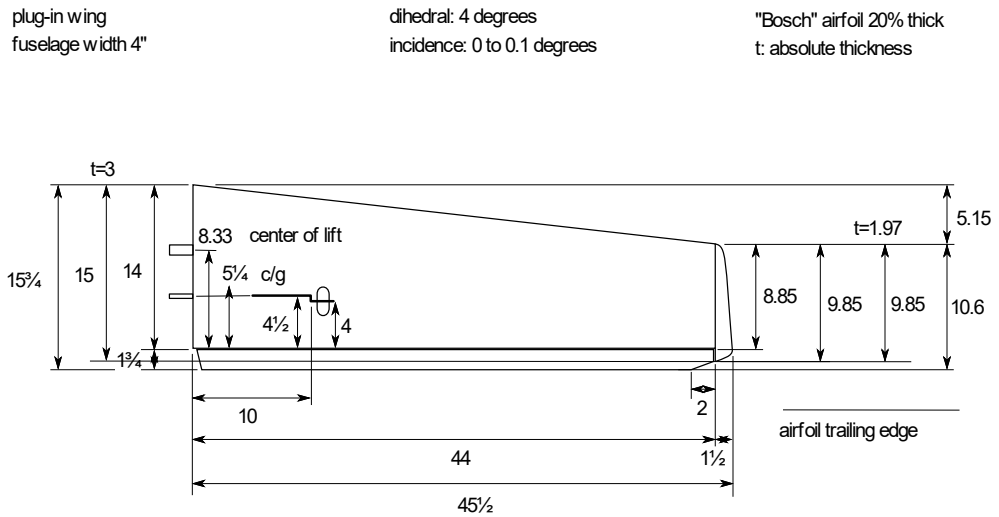


wing span 95, tip clipped, big ailerons

One mystery remains: The distance between the wing root and the rounded wing tip is not an integer multiple of 3 inches. Maybe the first two ribs were only 2 in apart, or even the first five ribs, we just don't know. Fortunately, that's not relevant for the simulator models.

For the design of a new, “resurrected” Simla, the plug-in tube is drawn at the center of lift or slightly ahead. That should minimize the load on the torsional lock pin, which is where the landing gear block is as well. This was a proposal for *Jeff Petroski* at Home & Hobby Solutions, who is expert in re-designing and kitting vintage aerobatic models. It was not needed to set up the parameters of the simulator models, though.

All these drawings and dimensions may be inaccurate regarding the original. After all it is hard to reconstruct even the geometry of a model from photos, not to mention the internal structure. For instance, the fuselage looks taller on the photos, the tail moment arm may be too long, the vertical tail may be shaped differently, to name only the biggest uncertainties. It had to be done with a limited amount of work.

Still these drawings should be good enough to set up simulator parameters that show the model's flight characteristics reasonably well. So all inaccuracies aside, the simulator experiments have proven that a real model, built after these drawings, would fly really well and probably just as intended by *Ed Kazmirski*. QED.

## The Simulator Model Parameters

Most of the physics parameters describe a model's geometry. It was easy to put several dimensions from the drawings into *Blaine Beron-Rawdon's* excellent Plane Geometry spreadsheets (see the overview at his Web site). They provide basic geometric data like horizontal and vertical tail area, rudder and elevator area, tail moment arm, and so on, as well as derived aerodynamic coefficients like damping. After all, a simplistic wire-frame model even gives first impressions how the model looks, following the old saying that if it looks right it will fly right. Of course, we didn't design Simla but I think it really looks right so I already expected it would fly right as well.

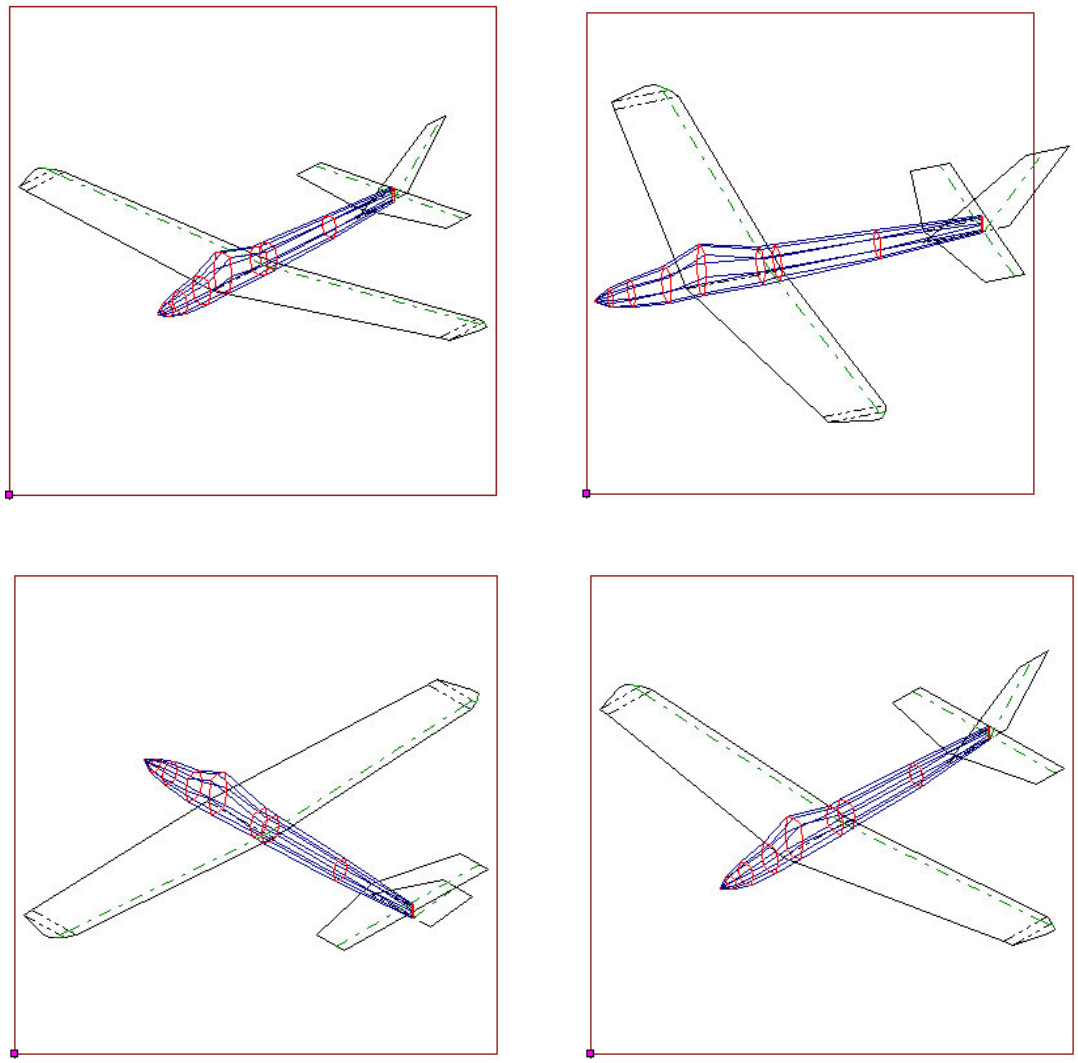

The first three views are "visual" projection, the bottom-right one is ISO projection. That leads to "undistorted" three-views: plan (top), side, and front. The latter is rather unspectacular (except that the model looks nicely "centered") while the side view shows at least three interesting points.

One of them is the vertical tail's aerodynamic center, reference point for tail moment arm – rather big – and height over the airplane's centerline – rather big as well. The latter is not unusual for a 1965 design, though.

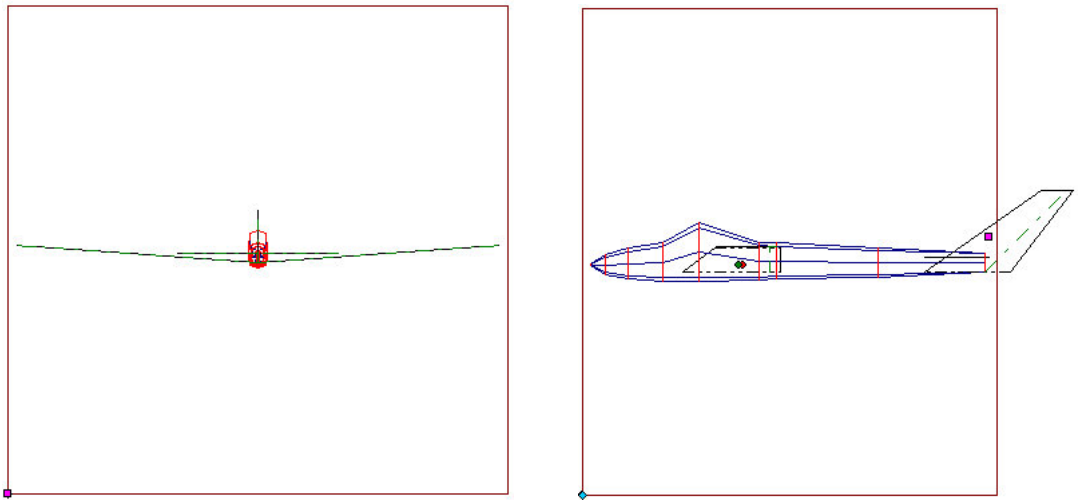

The other two points, shown in the wing, are the center-of-gravity (C/G, left/green) and the entire airplane's aerodynamic center, also called neutral point (right/red). The latter is an especially important characteristic value and hard to compute, so here is where Plane Geometry comes in handy. It allows to find a suitable balance (longitudinal C/G position) what is especially important in this case since no specification (by *Ed Kazmirski*) exists.

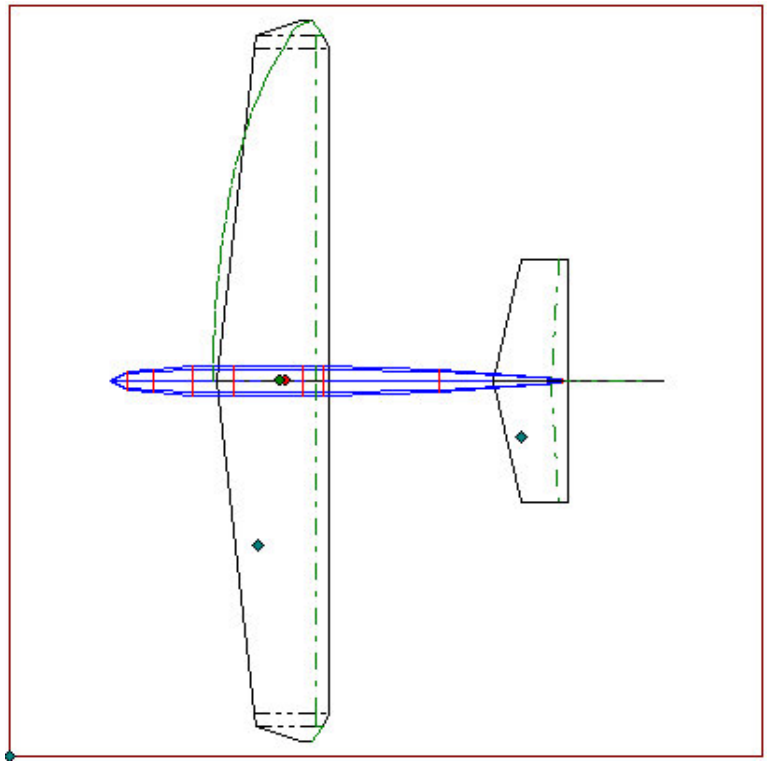

The plan view shows the aerodynamic centers of wing and stabilizer as well as again neutral point and C/G of the entire airplane. But first note that not only the planforms of wing and stabilizer, along with ailerons and elevator, give a clue of the airplane's stability and maneuverability. There is also an elliptical curve, drawn on the right wing's trailing edge. It is a hint that the substantially tapered wing (2/3 taper ratio) will likely stall not at the root first but more outboards. I would not call it a tip stall, but the simulator shows that the model drops a wing when stalled, what is easy to achieve even with the small elevator if only it is rigorously deflected (45 degrees).

That is not bad at all, though, since it is easy to avoid such extreme elevator throws and because it is yet easy to spin the model intentionally. In fact, quite controlled and reliable spinning seems to be an asset of Simla. Even if the control throws may be different in reality, it is good to know that the model is not touchy. That allows to choose a rather “neutral” balance where the elevator effectiveness is increased compared to a “stable” balance.

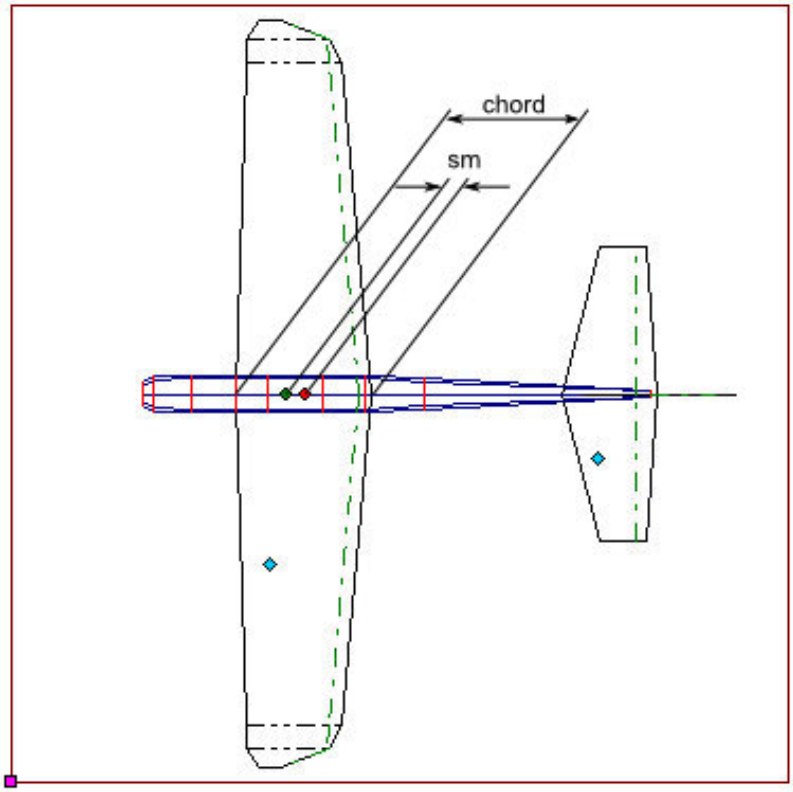


Static stability margin, or shortly static margin, is the ratio of two "moment arms": distance between the C/G (mass center) and the neutral point (aerodynamic center) of the airplane divided by mean wing chord length (or mean aerodynamic chord, MAC), simplified to root chord in the sketch.

A big static margin (say 15% or even more), that is a quite fore C/G, means the plane's weight pitches down heavily so the horizontal stab has to push down heavily as well – a very stable setup.

That is not how an aerobatic model is set up. I think Ed used a 0-0-0 setup with the symmetric airfoil and “centered” configuration of Simla, meaning no incidence angle of wing and horizontal stabilizer and no propeller down thrust. Substantial incidence and down thrust would just make no sense with the zero-pitching-moment wing airfoil. That is matched by a small static margin (the C/G only slightly ahead of the neutral point) of about 5% (5.3% to be precise), giving a “neutral” setup both in upright and inverted flight. That means the model flies where it is pointed to and is not brought back to level flight by static stability.

And indeed, the calculation showed the C/G should be at about 5¼" ahead of the aileron hinge line, giving 5% static margin and a neutral and pleasant flight behavior in the simulator. There, I ended up with 0.05 degrees or even less wing incidence, compensating the landing gear’s drag moment. The real Simla had a small jack screw to adjust wing incidence. Of course, the wing had no washout. And by the way, the “original” Simla versions tested here have the 2.25 degrees right thrust that seems to be visible in the photos while the “modern” versions have zero right thrust.

## The Wing Airfoil

Some other physics parameters are the aerodynamic lift, drag, and moment coefficients of the wing, derived from the wing's planform and airfoil. These calculations are not part of Plane Geometry and have been done in an own spreadsheet.

The airfoil was something special in Simla's design. Most aerobatic contest models had cambered wing airfoils with blunt leading edge, like Taurus had NACA 2419. In the winter 1963/1964, Ed Kazmirski tried something really new, a "pusher" design with the engine on the tail of the airplane and a new wing design, a swept planform with straight trailing edge and a new airfoil:

"The airfoil of the wing comes from *Fritz Bosch*, co-winner of the 1963 Internats. It is a 20%, symmetrical section with a sharper leading edge than is now popular, providing better spinning tendencies."

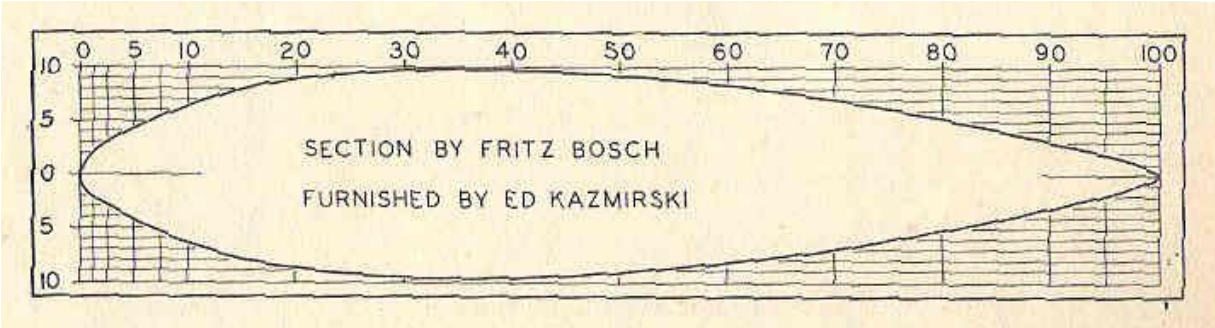


from the May 1965 issue of Model Airplane News (MAN)

After successfully using this wing *on his Taurus 2* in the 1964 contest season, obviously Ed K. designed Simla in the winter 1964/1965 using the same wing layout and airfoil. The rather coarse outline shown in the magazine is well approximated by a modified NACA 0020, with maximum thickness at 37% of chord (instead of 30%) and the leading edge radius being only 1% of chord (instead of 4.4%). The drawing seems to be a bit vague (obviously the section is not drawn symmetrical), but it closely resembles the calculated airfoil.

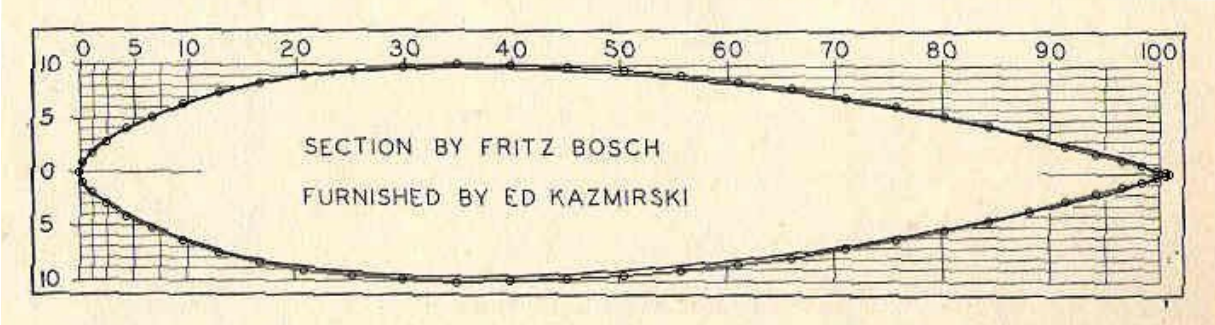


*Martin Hepperle's* JavaFoil applet was used to generate the airfoil outline (dotted line laid over the magazine picture). To create the airfoil in that program, select "Family: NACA 4-digit modified", enter "Thickness: 20%", "Thickness Location: 37%", and "Leading Edge Radius: 1%".

Differences are in thickness (lower half of original is 1% less) and length (original is shortened at the trailing edge), but otherwise it's a tight fit. That is good enough to calculate (estimate) the airfoil's aerodynamic coefficients, which are only roughly approximated in the simulator, anyway.

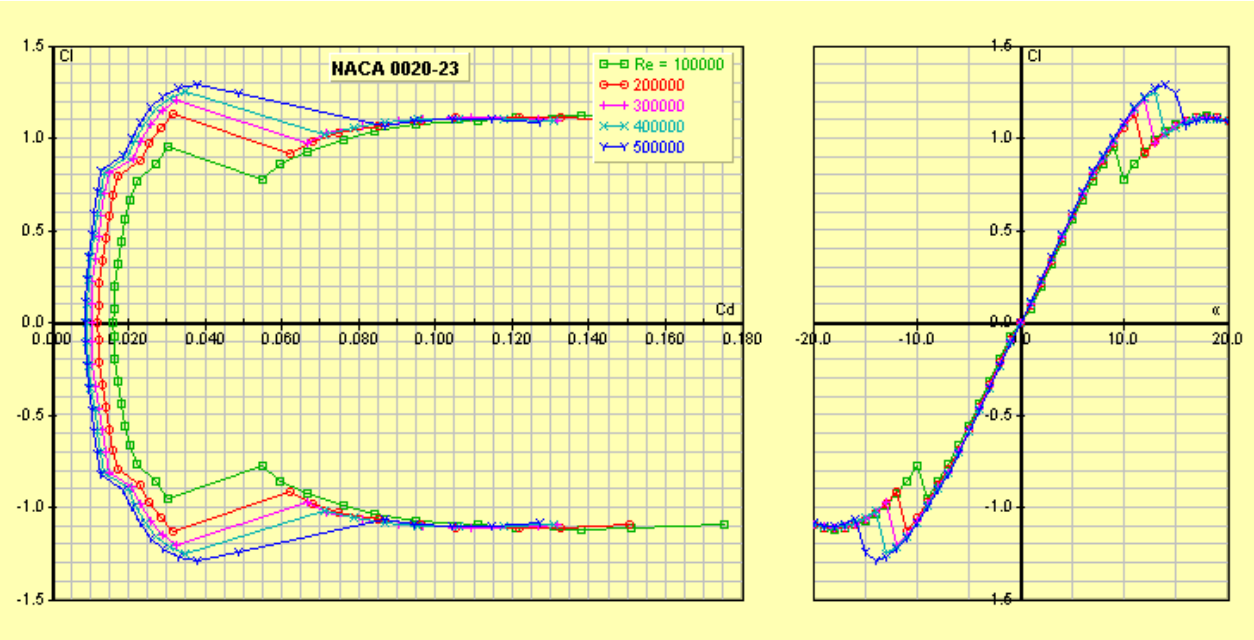


Using the Eppler stall model and the extended Eppler transition model, Java-Foil computes nice smooth polars. They show not only small drag at low AOA (angle-of-attack) reminding of “laminar” airfoils. There is also a noticeable stall which occurs at smaller AOAs when Reynolds number (flight speed or chord) is lower. Both characteristics help in flying patterns and deliberately stalling the model but they are not possibly rendered in the simulator.

The JavaFoil calculations show a decently increasing down-pitching airfoil moment with increasing AOA (-0.005). That would require to set the C/G back even more to have a “neutral” balance for Simla. For two reasons I refrained from doing that, though. First, real wind tunnel measurements of symmetric 4-digit NACA airfoils show no pitching moment except at stall. And second, Simla's main landing gear is positioned the right amount aft of the C/G at 5% static margin to give a pleasant take-off and landing behavior.

In the end I set the coefficients for the simulator analog to the wind tunnel measurements and with no down-pitching moment except at stall. The *airfoil* coefficients were used together with the wing planform to calculate *wing* lift and drag coefficients. These values, along with the Plane Geometry values, are available for download from my website.

The aileron effect (increase of lift, drag, and moment) coefficients have been as well estimated after wind tunnel measurements, considering their small percentage of chord. The arbitrarily chosen 25 or 30 degrees aileron deflection make for a decent roll rate despite the big wing span. (The first Simla version’s wing aspect ratio was 8.25, the clipped one’s still 7.25.)

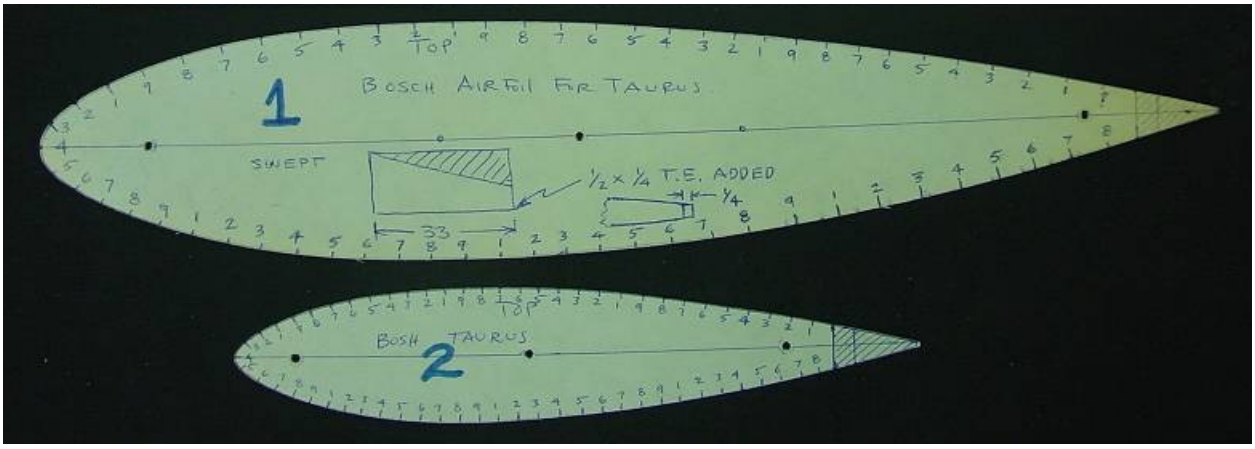


*Charles Winter* contributed to the Taurus thread at RC Universe. Back in the 1960s, he was acquainted with *Ed Kazmirski* and made foam-core wings for Taurus models. He still has the templates for cutting the foam cores, and showing them (here) effectively verified our airfoil assumption.

## The Drives

Simla had and needed one of the powerful .60 class two-stroke engines, which were coming out only in the mid-1960s. There were no alternatives, neither bigger two-strokes nor four-strokes or even electric drives. Still we don't really know which engines *Ed Kazmirski* used for Simla. Surely he had to use the most powerful ones he could get, and it seems he used three of the most powerful engines available at the time.

That were the Super Tigre ST 60 R/C, the Veco RC 61, and probably the Merco 61 R/C. The Super Tigre is explicitly mentioned in the advertising (page 6 above) as well as in the short article (page 8 above), and Ed used the ST 56 R/C on his Taurus 2. So it should be quite sure that he used an ST on Simla as well, the more so as it was known to be exceptionally powerful. That's true also for the Veco, which came out later and was praised by Ed K. in an advertising in 1966. There's no other indication that it was used for Simla, though. The Merco is mentioned only once in connection with Simla (in this post), but I'm quite sure that it is shown in the bottom-center picture in the short article (page 8 above). If you compare picture and drawing (e.g. in this review), you will see that all details match. The May 1965 photos of the first Simla version definitely seem to show the ST 60 R/C, though.

Be it as it may, the three engines are comparable and their power (slightly less than 1 hp) is still quite scarce for the big model. The original version (102” wing span) was a huge model (one of a few tried by top pattern competitors back then) but still had the same wing loading as a standard Taurus (18 oz/sq-ft). That's why I declared it an aerobatic motorglider, meaning it is big but has low weight and drag so it gets away with relatively low power. The thrust/weight ratio of Simla was smaller than that of Taurus, so Simla had to fly patterns with more momentum, just like a motorglider.

Scaling up the Taurus, the engine had to be slightly more powerful than the available engines actually were. So obviously Ed K. "tuned" the Super Tigre for more power (see ad, page 6 above). I assumed 1.3 hp for my calculations, that is the power a stock Super Tigre achieved in the late 1960s. Typical was an 11x7" wooden propeller, but eventually I assumed an 11x8" prop which is even mentioned in the Veco ad and together with the Merco. It feels better in the simulator because the model flies faster with more momentum and the patterns get rounder and nicer. Still it looks like slow and majestic flying due to the model's size.

The power of the simulator models may be a bit optimistic, even though not much. After all, a quite modern OS 61 FX would be equivalent in power and still have not much more weight. For estimating the drive parameters, I used the ThrustHP program what might have contributed to slightly optimistic power settings. Anyway, with ample power and with an 11x8 prop, Simla goes beautifully through all classic patterns. After all, that had to be shown by building and testing a "virtual" Simla.

What remained to be shown was a "modern" Simla. Just because I had some information at hand, I assumed the RCV 91-CD four-stroke engine, which is nearly up to the common OS 91. It turned out that this engine, like any .90 four-stroke, is able to pull Simla through all patterns with a quite big but low-pitch 14x6 propeller. If Simla is built lightweight, the thrust/weight ratio is well bigger than 1 (actually 1.3) but top speed is much slower than with the two-stroke and 11x8 prop. That means flight speed in patterns is quite "constant" and all modern patterns are possible just by brute force (thrust).

If Simla is built not quite that lightweight, a bigger RCV 130-CD four-stroke engine may be advisable. It contributes a lot to the weight, though, so even with a 16x6 propeller there is not more benefit than an only slightly better thrust/weight ratio and even slightly less flight speed. Another experiment was a RCV 91-CD and retractable landing gear. The reduction in drag is marginal due to low flight speed but the reduction in thrust/weight ratio is noticeable, so this is a beauty-related version only.

What might be most interesting, though, is an electric drive. Again due to information at hand, I assumed a motor from the Model Motors AXI line. Even a quite small AXI 4120/14 with a 12x8 propeller is enough and will give a better thrust/weight ratio than the original two-stroke engine at slower and more "constant" flight speed. The small motor was chosen for low weight and despite slightly worse efficiency. The high $k_V$ value allows to get by with only 5 LiPo cells saving even more weight.

With the motor nicely cowled (only a NACA cooling air inlet and a square outlet) and with the original small landing gear, the electric Simla has the same weight but even less drag and more "pull" than the original version powered by a two-stroke. So it would be an even better "motorglider" aerobat but yet keep the character of the design. I think *Ed Kazmirski* could have liked it.

## Corrections

It was an exciting time when we all wondered how Simla could have been shaped and sized, so I was in a hurry measuring. I didn't notice that I was mislead by the picture I had brightened to better see the outlines.

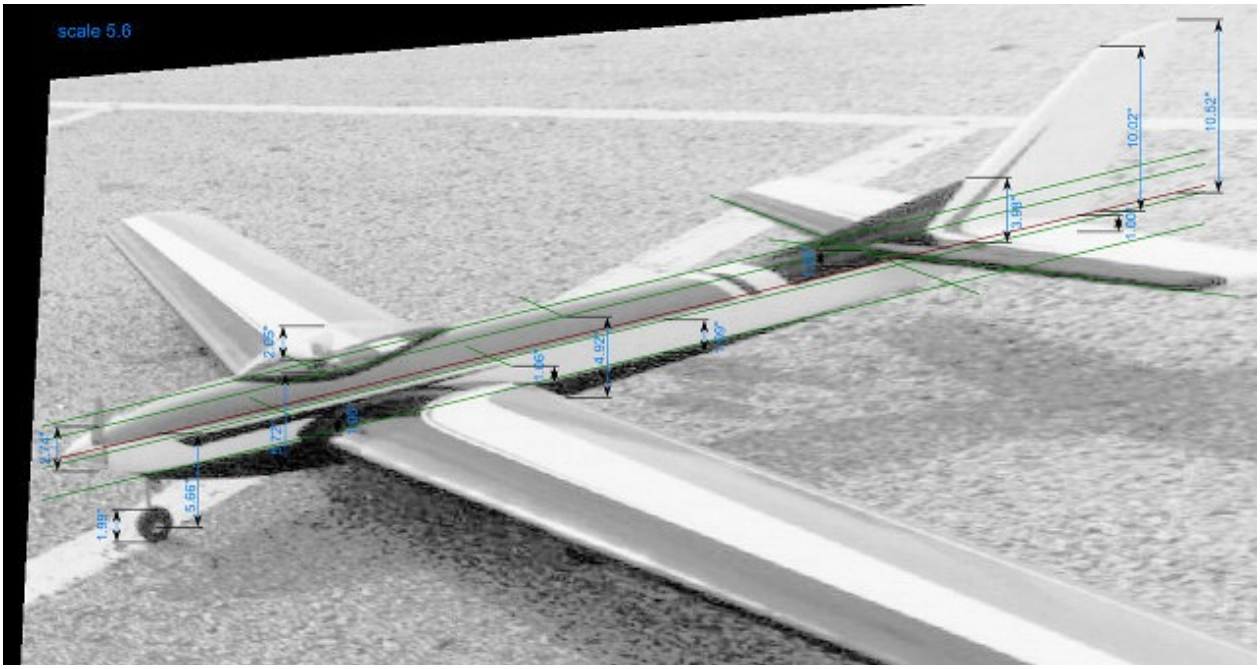


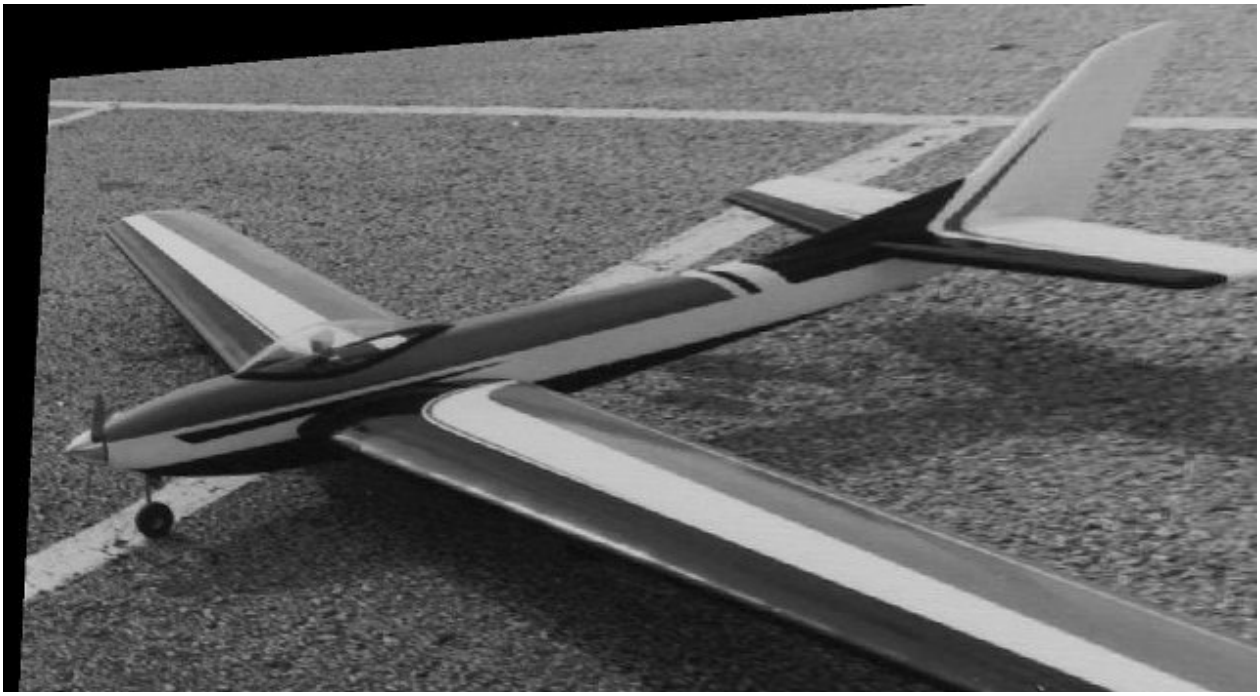

I should have compared it to the original. Besides, I underestimated the curvature of both fuselage top and bottom, maybe due to the oblique view. We were quite satisfied with the vertical tail, but the fuselage seemed to be too flat. On the pictures it just seemed to be taller, as well as the landing gear.

That has been corrected nearly a year later. Another one of the contact prints was used to estimate the correct, or at least better values.

In the oblique view on the right side of the model, there is not only the spinner to compare to but also the engine cylinder. The dimensions of both are well known. Besides, the tallness and the nice curvature of the turtledeck are visible.

Both fuselage top and bottom have been made ½ inch "thicker" and they got a more circular cross-section instead of an elliptical one. All wheels have been made ½ inch bigger in diameter (and accordingly in thickness), and additionally the landing gear struts ½ inch taller.

The corrected fuselage sketch reflects all these modifications and "looks better" than before. The vertical tail's shape and the tail moment arm are still not quite certainly known, but now they look right, too.

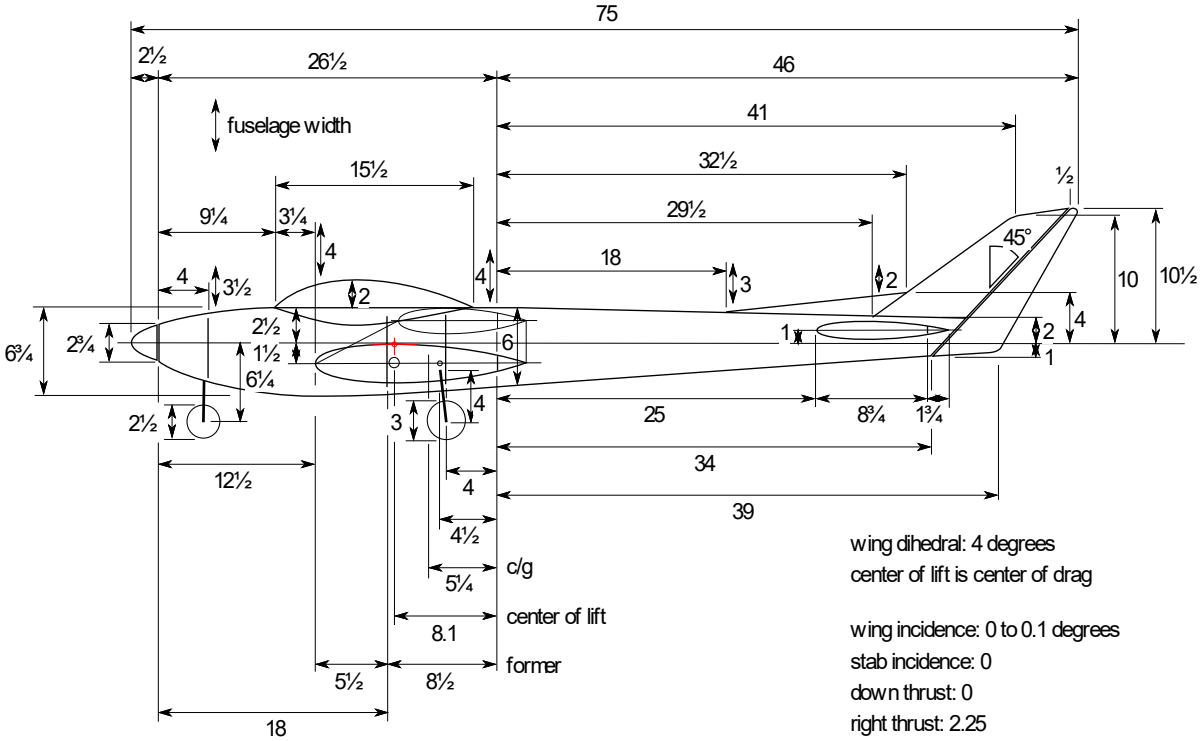

In the Plane Geometry wire-frame drawings, only the fuselage modifications are shown (there is no landing gear shown). Just for completeness, the following oblique views show the noticeably different, and hopefully “better” appearance of Simla after the corrections.

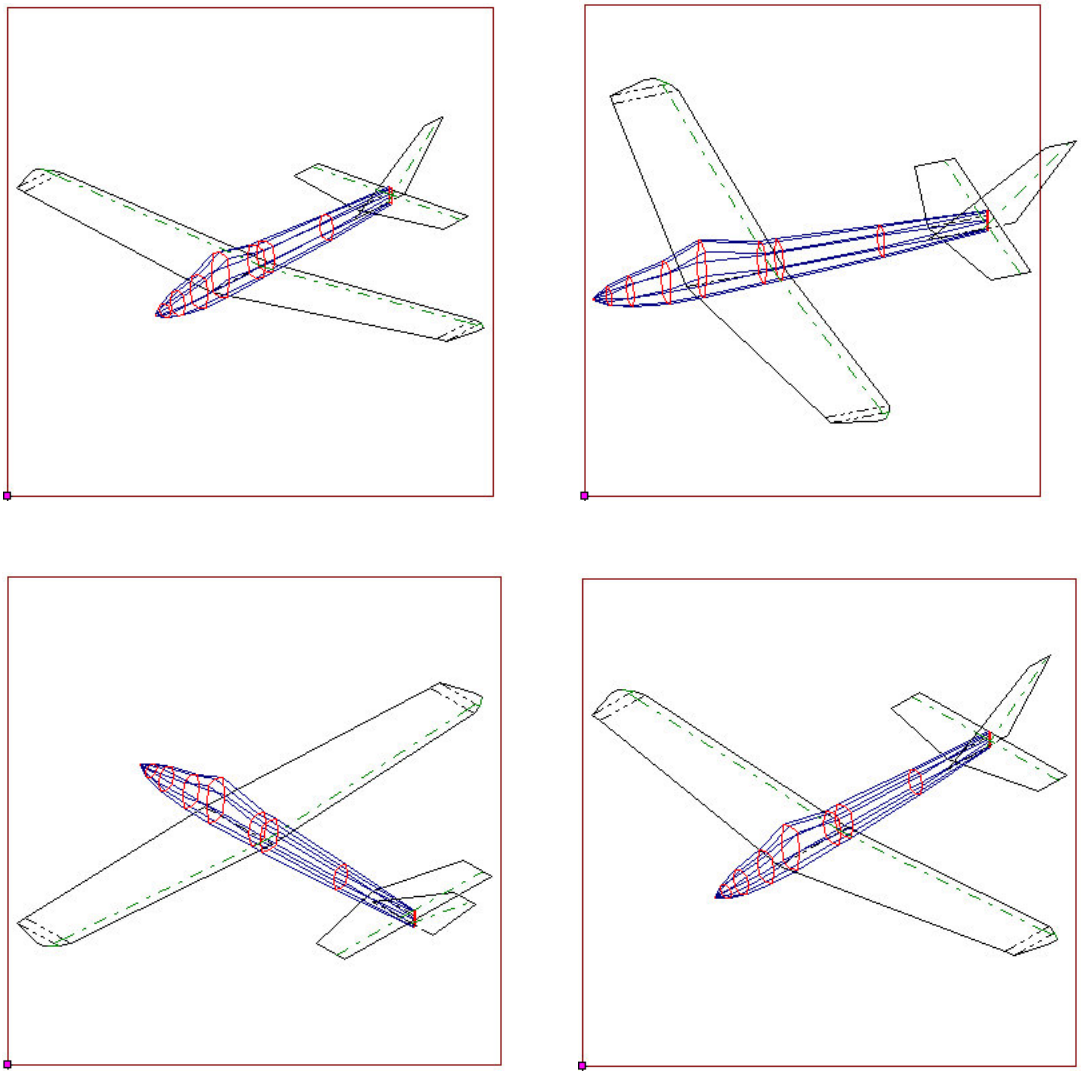

In the front view, the taller (but not wider) fuselage shows the slightly (less than 10%) greater frontal area. It has been reflected in a bigger fuselage drag in the simulator parameters. The longer landing gear struts and bigger wheels have been reflected in a bigger landing gear drag as well as a longer drag moment arm. All that turned out to be hardly noticeable.

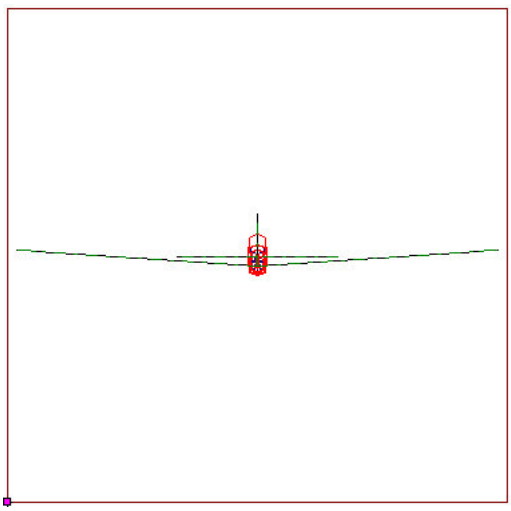

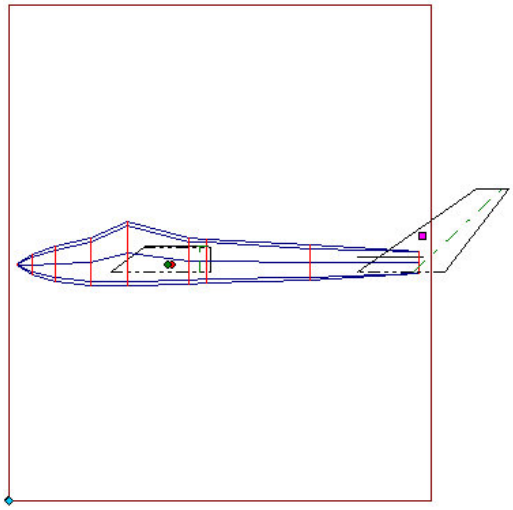

The side view shows the 15% greater fuselage side area, which becomes noticeable only in yawing maneuvers, especially side-slip. All in all, the flight characteristics have changed only marginally.

## Validation

By June 2011, two real Simla models were flying, both with a .90 two-stroke engine but one weighing 10.5 lbs and the other one 8.9 lbs. These weights had been assumed for the simulator models and now they turned out to be realistic.

Even with the lower weight, using a .61 engine is dreaded by the owners. Therefore, a new 102 in wingspan simulator model has been created with the well-known power of the Merco 61 R/C engine and only 8.43 lbs weight, just to show its feasibility. Of course, energy-consuming maneuvers (fast axial rolls, snaps) are possible only in level flight or even a slight dive, but the mid-1960s maneuver schedule can be flown gracefully. And a modern .61 engine might well have enough power for a SPA expert schedule. At the big model size, all maneuvers would just *look* smaller than usual.

Both real Simla models have been flown by the same expert pilot, and the flight characteristics he reported all had been observed in the simulator as well. (Look here and here in the thread at RC Universe.) That should be proof enough of the realistic flight behavior of the simulator models so also the rendering of the .61-powered version should be reliable.

Again: QED.

## Acknowledgement

That was the evolutionary history of the Simla simulator models.

I have to thank the other members of the “gang” for making this project happen at all, for many pictures and information, and for the inspiring discussions.

Above all, Duane Wilson (kingaltair) from the USA, the driving force of the project; but also Evan (pimmnz) from New Zealand and Ray (RFJ) from Ireland , contributing pictures and information from magazines as well as discussing critically and inspiringly; Jeff Petroski (jjpetro) of Home and Hobby Solutions, USA, engineering and kitting the resurrected real Simla; Andy Kunz (AndyKunz), giving some useful advice. Sorry if I forgot anyone, you know who you are.

Cees Wester (Taurus Flyer) from the Netherlands chose not to help but second-guess and reconstruct his own Simla, so there's nothing to thank him for.

## Conclusion

This was a hobby project. I had only a limited amount of time and resources to spend on the exact measurement of Simla's dimensions. Yet a reasonably and sufficiently reliable specification of the model came out. The visible simulator (3D) model was a quick-and-dirty job, but at least it has been corrected to show the more rounded fuselage top and bottom, giving a taller looking fuselage like the original, and a taller landing gear as well. Till the appearance of the reconstructed Simla as a kit, we had, and now we still have, the virtual Simla models to literally simulate the look and feel of this legendary model. Though not perfect, they should be yet good enough for all practical purposes.

Enjoy!

Burkhard Erdlenbruch

mailto:Burkhard@Erdlenbruch.de
http://time.hs-augsburg.de/~erd/Modellflug/textReflex.html

More REFLEX models and the latest versions are on my page
http://time.hs-augsburg.de/~erd/Modellflug/textDownloads.shtml